TOWNSHIP OF NORTHAMPTON
55 Township Road
Richboro, PA 18954

Zoning/Building/Code Enforcement Department
Telephone #: 215-355-3883

Fax #: 215-357-3650

DECK REQUIREMENTS FOR PERMIT APPLICATION/REVIEW

Design Criteria is to be per IRC 2009, AS AMENDED. 60 P.S.F. LIVE LOAD/10 P.S.F. DEAD LOAD.

3 SETS OF architectural plans, fully dimensioned with specifications, drawn to scale are required. Plans are to include a footing plan; framing plan; complete section(s) of deck , stair, guardrail, and handrail details; and sections of deck guardrail detail and a finished deck plan view. A graspable handrail 34" high min., vertically from the stair tread noses mounted to the stair guardrails is to be provided on all stairs with 4 or more risers. Provide a cross section with dimensions of proposed handrails. Handrail brackets should be approximately 30" apart. Handrails are to have a maximum grip size of 2 ¼" across, and max. perimeter of 6 ¼" and min. perimeter of 4", and be returned to the posts at top and bottom or have safety terminals.

A 36" high guardrail is to be provided around all decks/floor surfaces greater than 30" above grade. Benches are not permitted behind guardrails unless such guardrails are 36" high measured from the bench seat. All balusters or guards are to have their spacing **less than 4" apart.** Do not countersink bolt heads on rail posts or beams. **4X4 guardrail posts ARE NOT PERMITTED TO BE NOTCHED for the attachment to the deck. Guardrail posts are required to be bolted to the deck joists/ rim board, NOT nailed.**

The space between the risers- treads- and the bottom of the stair guardrail is limited to a max. 6" diameter.

Treads are required to be 10" min., measured horizontally nose to nose. Show on details. Max. nose is limited to 1 ¼".

Risers are required to be 7 ¾" max., and all to be equal within tolerances permitted by the code. Risers are required to be closed to a less than a 4" space, except for stairs with a total rise of 30" or less. Show on details.

All components of the deck (posts, beams, joists, flooring, guardrails, balusters, stairs) must show the type/grade of lumber to be used.
Example, Southern Yellow Pine, No. 2 pressure treated to .25 ACQ, .25, or copper azole.

Lumber in contact with the ground (not buried) is to be .40 ACQ treated. If buried in ground, .60 ACQ treated.
Specify All bolts, nails, screws to be hot dipped galvanized meeting ASTM A-153 stds., or, stainless steel.

Decks 5' above grade measured from the deck floor are to have 6x6 posts, min., and deck height to be shown on plans. Posts are required to be anchored to the piers with post base anchors and bolts, (ABA44Z/ABA66Z, ABE44Z/ABE66Z Zmax rated), or, PA44ETZ/ PA66ETZ, or, equal anchorage.

All decks with spas, roofs, enclosures, second story decks etc. are required to have signed and sealed details/ plans/ specifications by a design professional responsible for the design of the project. All design loads are to be indicated on the plans.

Decks attached to trusses or engineered joists are required to have signed and sealed plans/specifications by a registered design professional responsible for the design of the project. All design loads are to be indicated on the plans.

Additional sections, details, specifications will be required for complex, multi-level, angular decks, etc.

The department reserves the right to require any deck plan or component detail to be signed and sealed by a registered design professional responsible for its' design. Any material **other** than .25/.40 ACQ/copper azole or better, pressure treated lumber, or cedar shall have a current ICC-ES, NER, ILBO research report, or evaluation service report on that product. All requirements contained in the report must be complied with, and all plans and specifications are required to be signed and sealed by a registered design professional responsible for the design of the project. Products without an ICC-ES, NER or ICBO report shall have structural calculations prepared by a Registered Design Professional, along with complete details and specs shown on the signed/sealed plans.

Sway bracing is required on decks over 5' high above grade, measured from the deck floor. Sway bracing may be required on lower decks depending on construction/conditions determined in the field.

Decks are **not permitted** to be attached to cantilevers. Install a beam row out from the cantilever. Piers within 5' of foundation basement wall are required to be 8' deep from bottom of siding/or top of foundation wall. This is the fill area of a house.

THE END/SIDE JOISTS AT THE END OF THE LEDGER ARE TO BE SUPPORTED BY A JOIST HANGER. THERE IS A NEW MODEL FOR THIS PURPOSE. MODEL # "LUCZ" BY SIMPSON CO.
SEE HANDOUT PICTURE.

JOISTS ARE REQUIRED TO BE SECURED TO THE BEAM WITH TIE DOWNS. THE MODEL NUMBER FOR THIS PURPOSE WOULD BE #H2.5Z HOLD DOWN TIES BY SIMPSON CO., or, RT7TZ BY USP CO..

CONNECTORS INDICATED IN THIS HANDOUT ARE BY SIMPSON CO.. CONNECTORS BY USP COMPANY MAY BE SUBSTITUTED, AS LONG AS THE MODEL NUMBERS END IN " TZ " FOR TRIPLE GALVANIZED COATING WHEN IN CONTACT WITH ACQ P.T. LUMBER.

USP Structural Connectors
www.uspconnectors.com
1-800-328-5934 (TZ)
Products referenced (in Triple Zinc coating):

Simpson Strong-Tie
www.strongtie.com
1-800-999-5099
Products referenced (in Zmax coating):

LUCZ Concealed Flange Joist Hanger

Introducing Simpson's first concealed flange joist hanger for 2x lum The LUCZ's concealed flange design provides cleaner lines for visible applications such as second story decks and patio covers. It's also narrower, allowing joists to be installed flush with the end of a ledge or header where typical face-mount hangers will not perform.

Revised APRIL, 2008

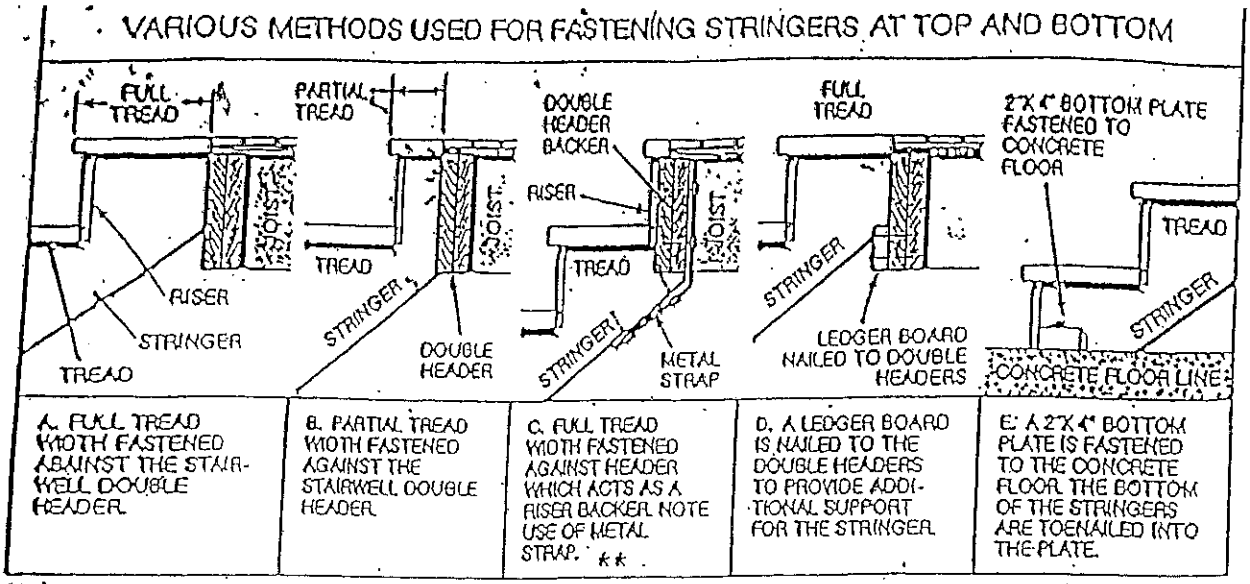

Figure 63–16. Some methods of fastening stair stringers. Fastening must be secure since stringers carry the main load of the stairway.

++ METAL STRAPS TO BE: SIMPSON MSTA24Z

or – ST22Z – or APPROVED EQUAL

NAILED WITH 10P HDG NAILS –

MEETING ASTM – A153 STANDARDS

PROVIDE STEPS TO GRADE – TREADS MIN. 10" – MAXIMUM RISER 7 ¾". HANDRAIL ON 1 SIDE 34" ABOVE NOSINGS, WITH GUARDRAILS ON BOTH SIDES OF STAIRS WITH BALUSTERS LESS THAN 4" SPACING.

ALL FRAMING MATERIAL TO BE ACQ .25 PRESSURE-TREATED SOUTHERN YELLOW PINE #2 MINIMUM GRADE.

ALL WORK IN STRICT ACCORDANCE WITH NORTHAMPTON TOWNSHIP REQUIREMENTS.

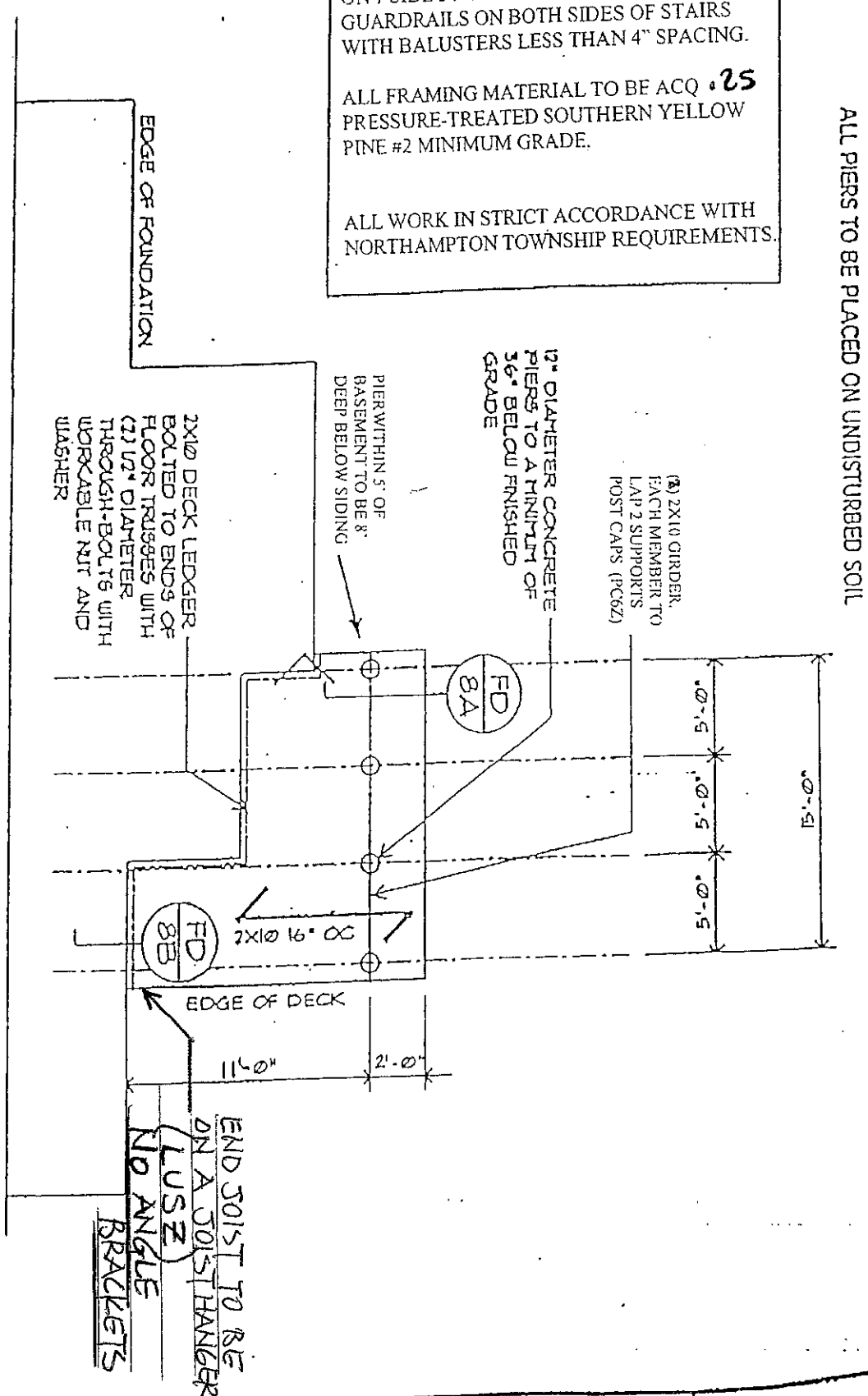

DATE	IN

SCALE: 1"=1'-0"

8/29/04

ALL FRAMING MATERIAL TO BE PRESSURE-TREATED SOUTHERN YELLOW PINE : OF MINIMUM GRADE, ACQ, OR, CA.

THIS DRAWING TO BE USED IN CONJUCTION WITH LAYOUT DRAWINGS FOR SPECIFIC LOTS.

ALL WORK IN STRICT ACCORDANCE WITH NORTHAMPTON TOWNSHIP REQUIREMENTS.

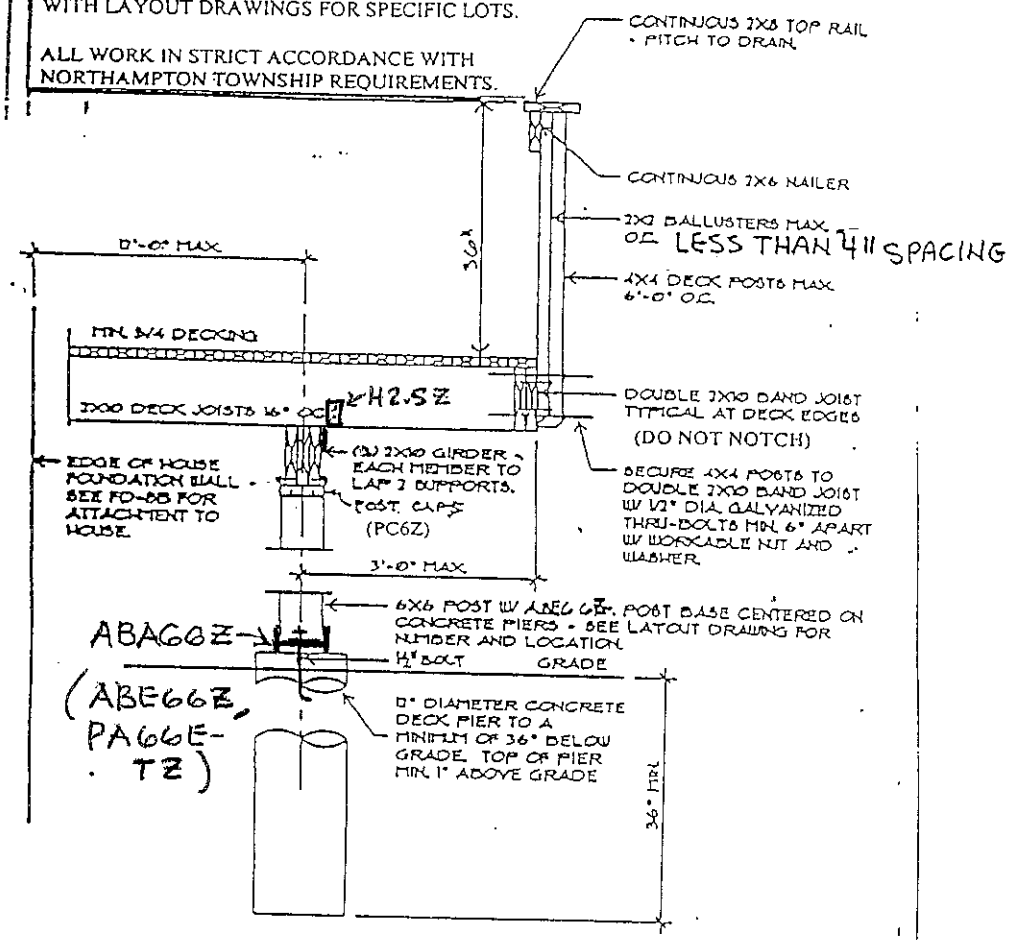

DECKRAILING-DETAIL

ALL FRAMING MATERIAL TO BE ACQ PRESSURE-TREATED SOUTHERN YELLOW PINE OF MINIMUM GRADE.

THIS DRAWING TO BE USED IN CONJUNCTION WITH LAYOUT DRAWINGS FOR SPECIFIC LOTS.

ALL WORK IN STRICT ACCORDANCE WITH NORTHAMPTON TOWNSHIP CODE REQUIREMENTS.

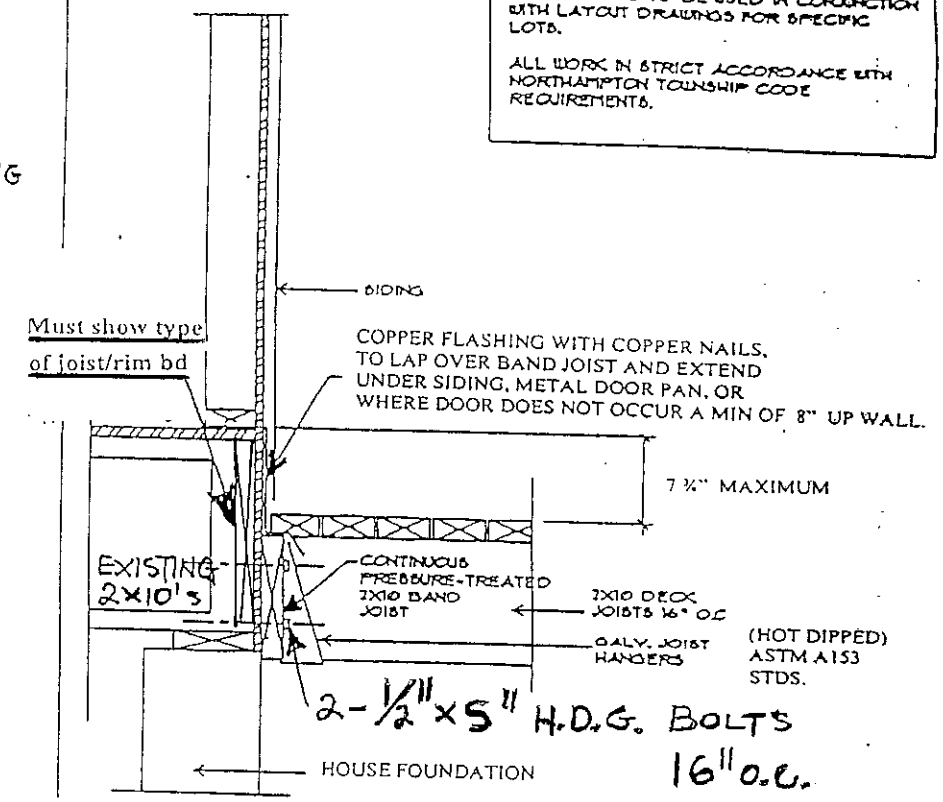

DECK-ATTACHMENT-DETAIL

8/28/04

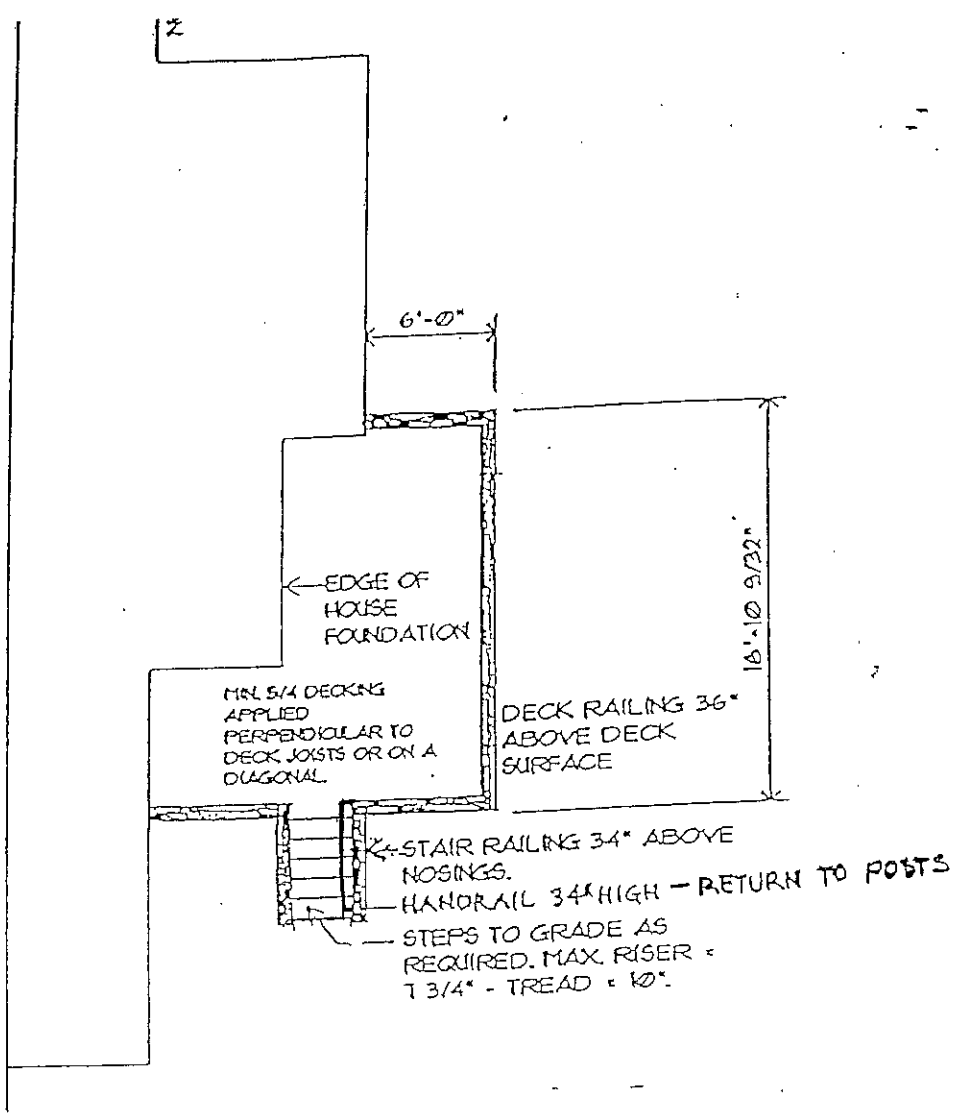

SCALE: 1/8"=1'-0"

FINISHED DECK PLAN

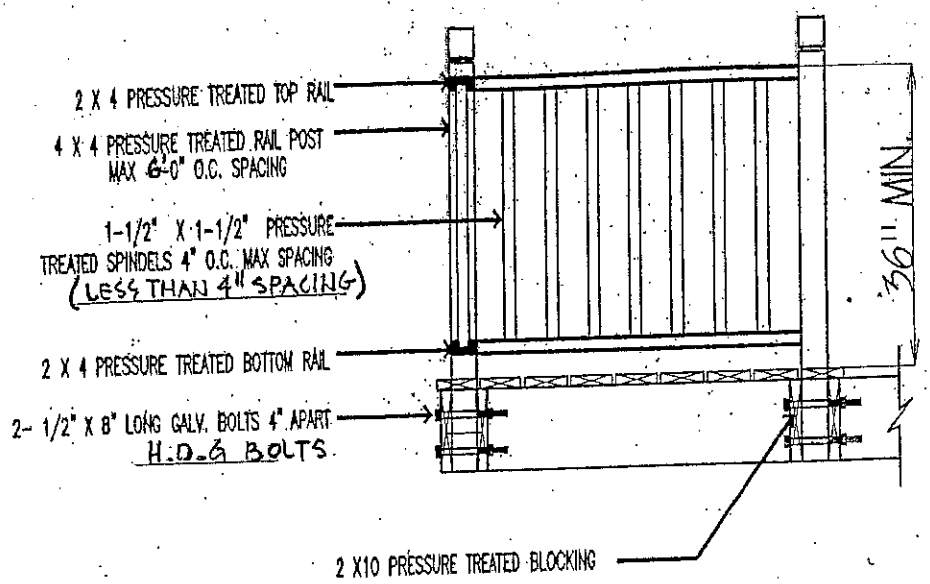

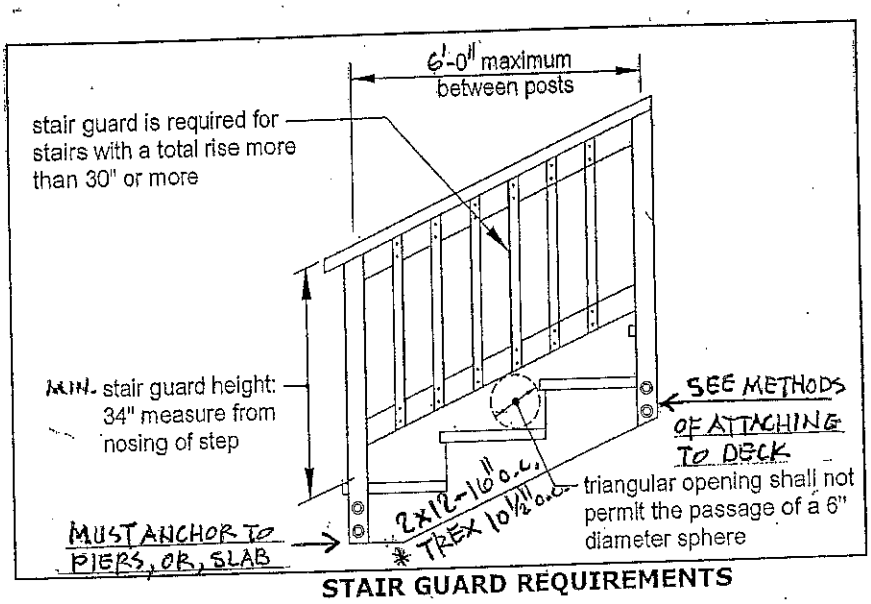

STAIR GUARD REQUIREMENTS

* STRINGER SPACING VARIES WITH COMPOSITE TREAD MANUFACTURER.

STAIR HANDRAIL REQUIREMENTS

All stairs with 4 or more risers shall have a handrail on one side. Handrails shall be graspable and shall be composed of decay-resistant and/or corrosion resistant material. The hand grip portion, if circular, shall be between 1-$^1/_4$" and 2-$^1/_4$" in diameter. Shapes other than circular shall have a perimeter dimension between 4" and 6-$^1/_4$" with a maximum cross sectional dimension of 2-$^1/_4$". All shapes shall have a smooth surface with no sharp corners. Handrails shall run continuously from a point directly over the lowest riser to a point directly over the highest riser and shall return to the guard at each end. Handrails may be interrupted by guard posts only at a turn in the stair.

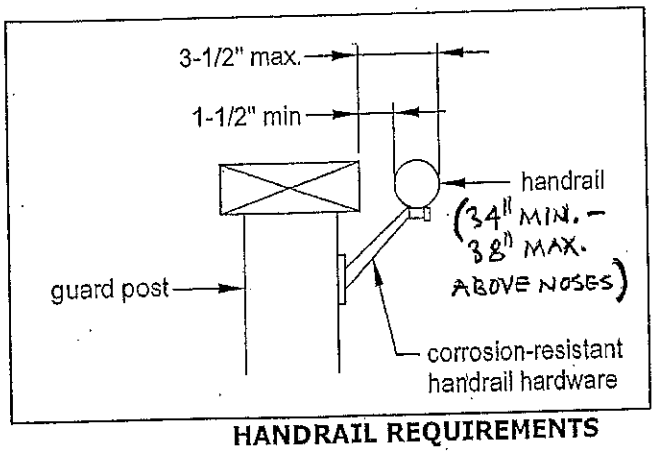

HANDRAIL REQUIREMENTS

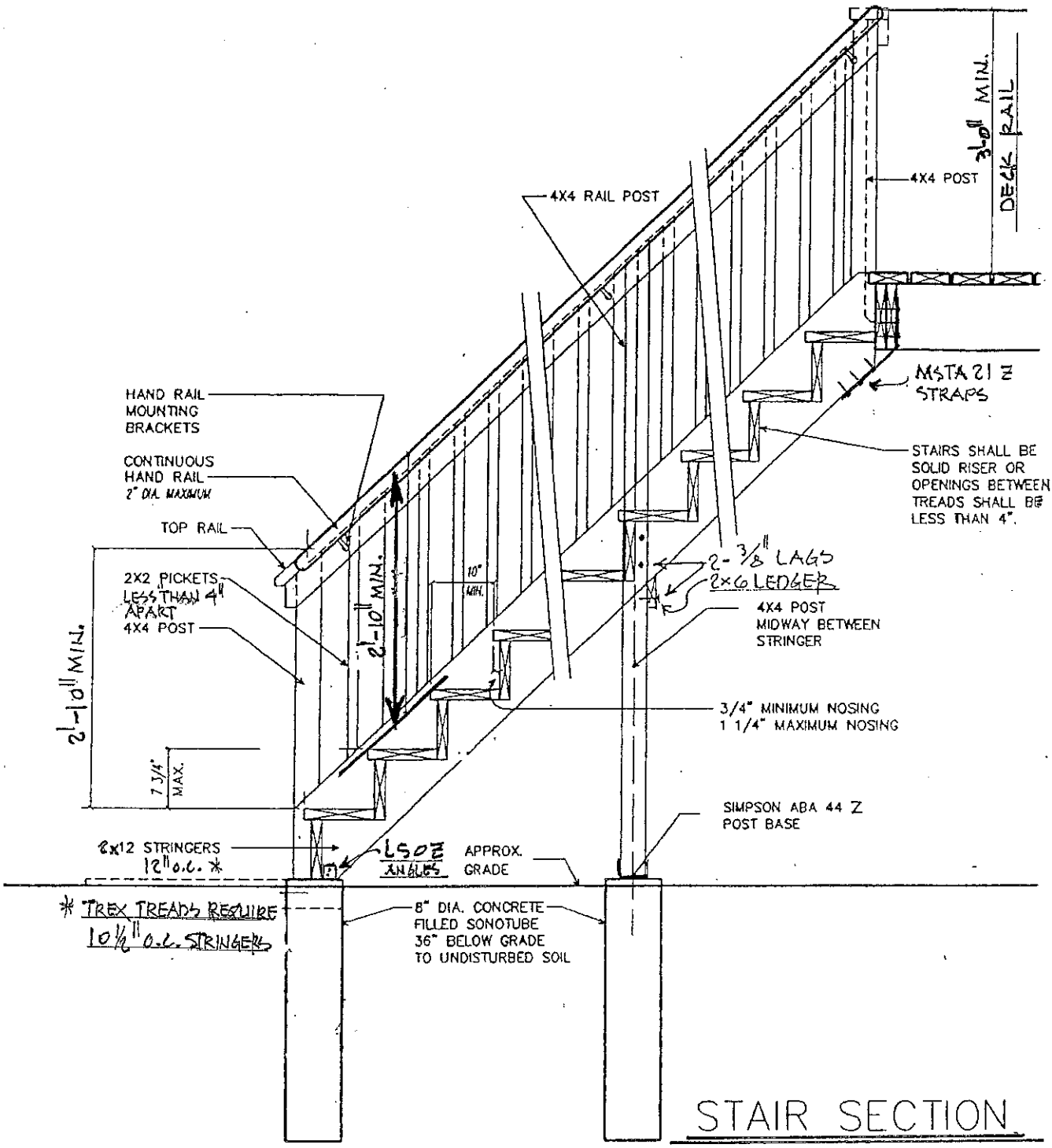

STAIR SECTION

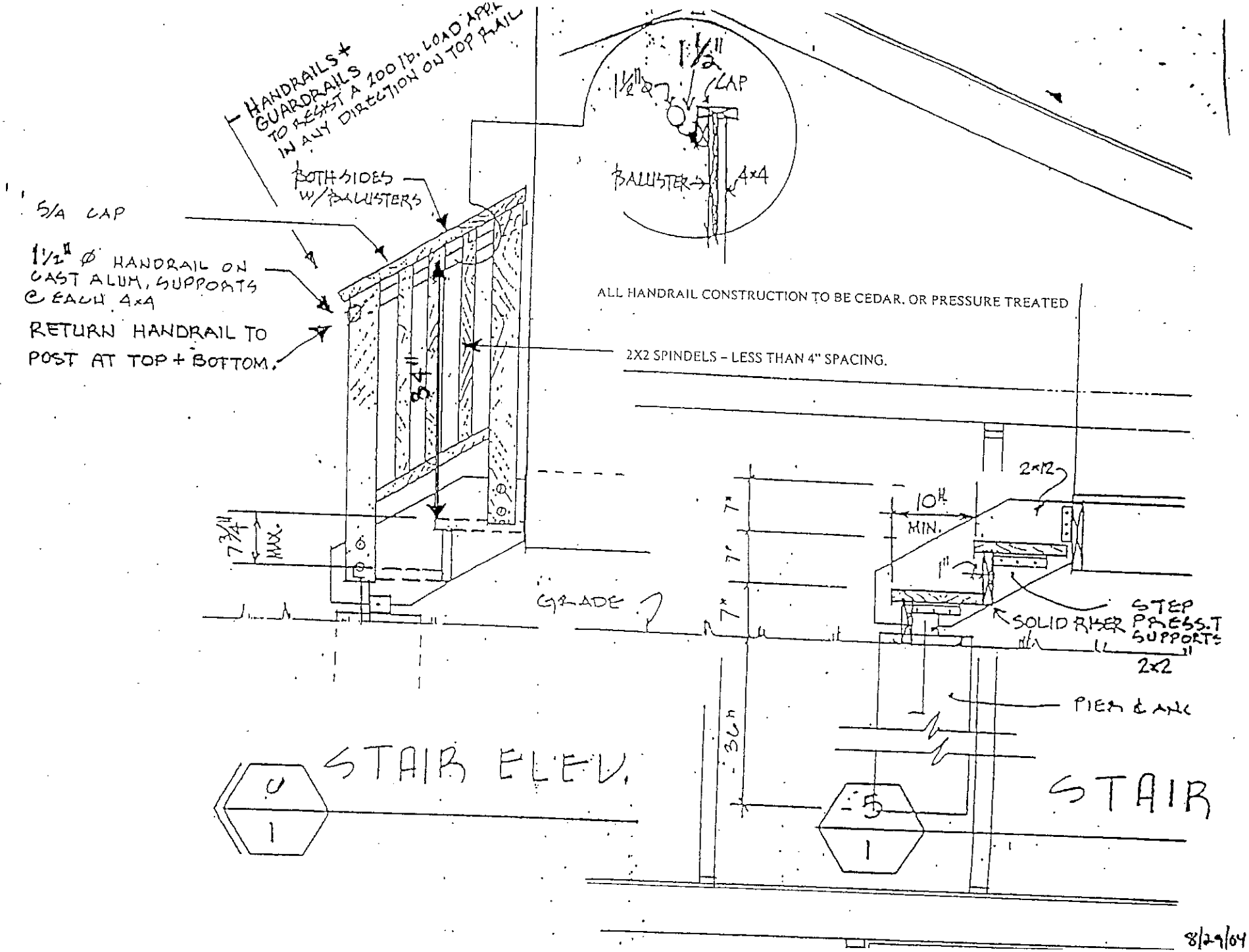
HANDRAILS + GUARDRAILS TO RESIST A 200 lb. LOAD APPL IN ANY DIRECTION ON TOP RAIL
BOTH SIDES W/ BALUSTERS
5/4 CAP
1½" Ø HANDRAIL ON CAST ALUM. SUPPORTS @ EACH 4x4
RETURN HANDRAIL TO POST AT TOP + BOTTOM.
34"
7¾" MAX.
GRADE
1½"
1½" Ø
CAP
BALUSTER
4x4
ALL HANDRAIL CONSTRUCTION TO BE CEDAR, OR PRESSURE TREATED
2X2 SPINDELS – LESS THAN 4" SPACING.
7"
7"
7"
36"
10" MIN.
2x12
1"
SOLID RISER
STEP PRESS.T SUPPORTS
2x2
PIER & ANC
STAIR ELEV.
STAIR
C
1
5
1

8/29/04

TYPICAL POST-BEAM CONNECTIONS

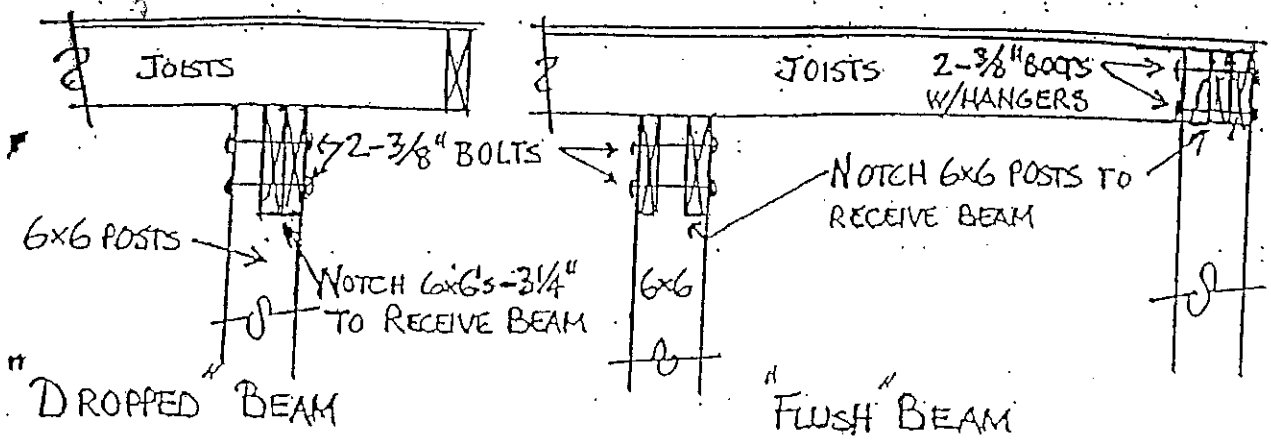

SWAY BRACING FOR DECKS OVER 5' HIGH. SHOW ON ELEVATION DRAWING.

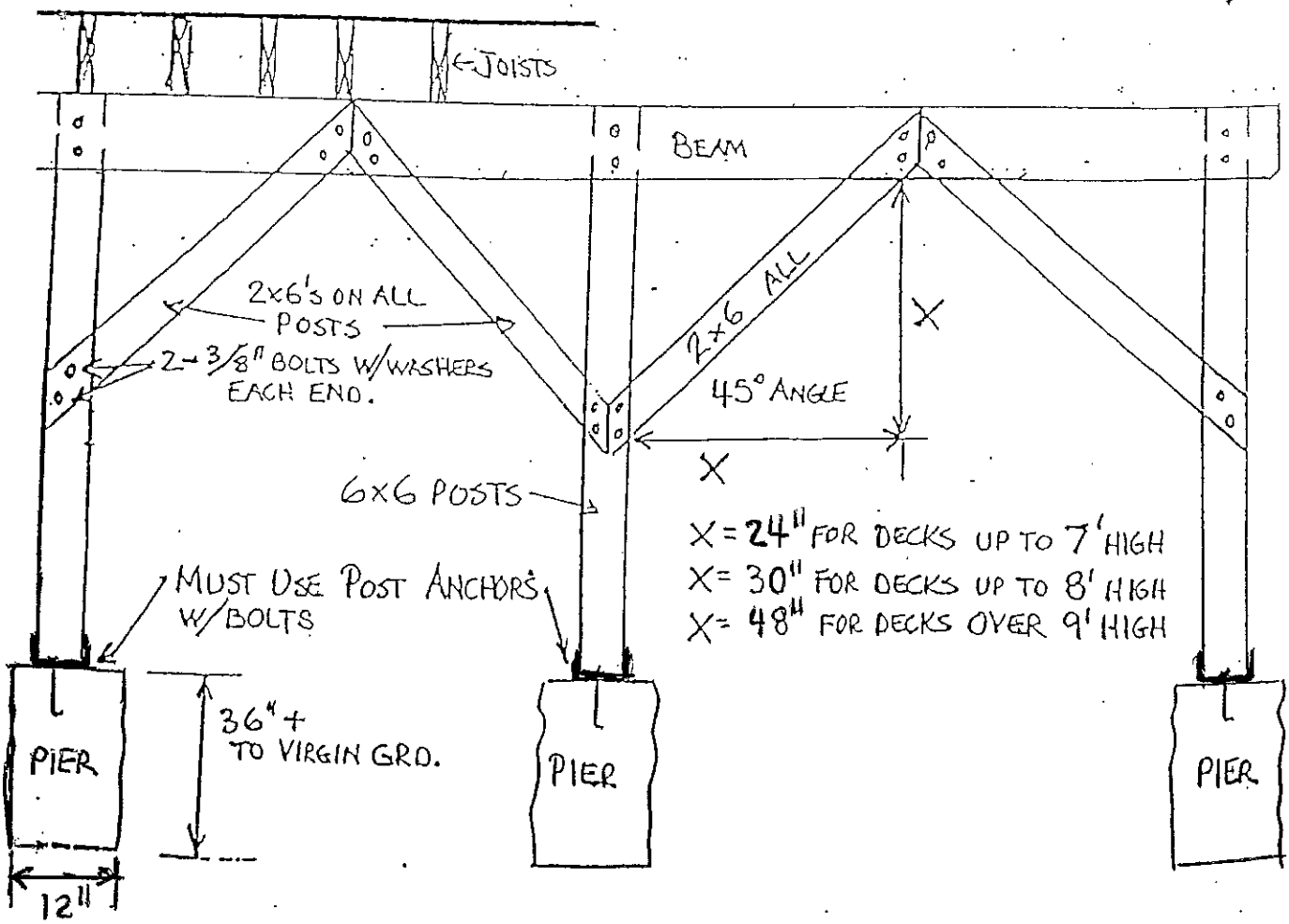

Lateral Load Connection

For decks that are partially supported by an adjacent structure, the connection between the deck and that structure is vital. A bolted or screwed ledger-to-rim board connection is suitable to support gravity loads, however in some cases the building codes require a connection that is able to resist higher lateral loads. In these situations tension ties are typically called out to tie the joists of the deck directly to the joists of the structure.

The Simpson Strong-Tie® DTT2Z Deck Tension Tie complies with new IRC requirements for laterally tying the deck to the house. The DTT2Z fastens easily to the joist using Simpson Strong-Tie® Strong Drive® screws *(included)*.

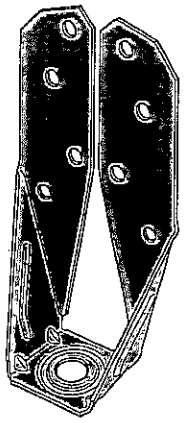

The DTT2Z Deck Tension Tie is a multi-purpose connector ideal for lateral load and deck-post connections. It features a ZMAX® coating for added corrosion resistance.

Code Requirements

✔ The lateral load connection required by Section R502.2.2 shall be permitted to be in accordance with Figure R502.2.2.3. Hold-down tension devices shall be provided in not less than two locations per deck, and each device shall have an allowable stress capacity of not less than 1500 lbs.

IRC-2009 Section R502.2.2.3

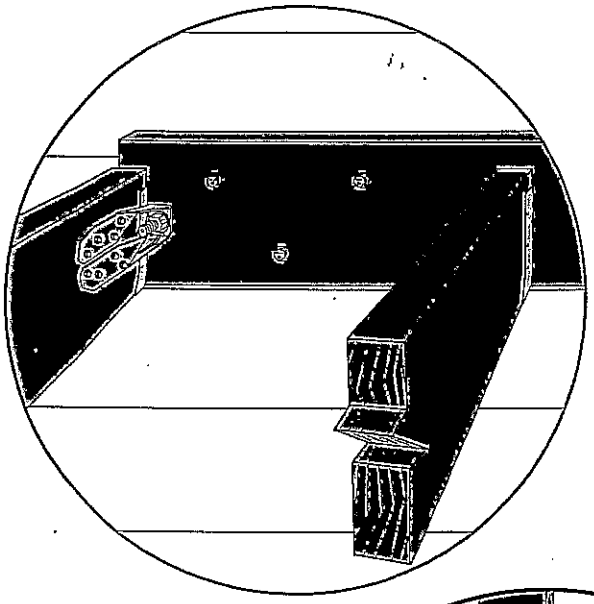

Deck to Ledger Installation Detail

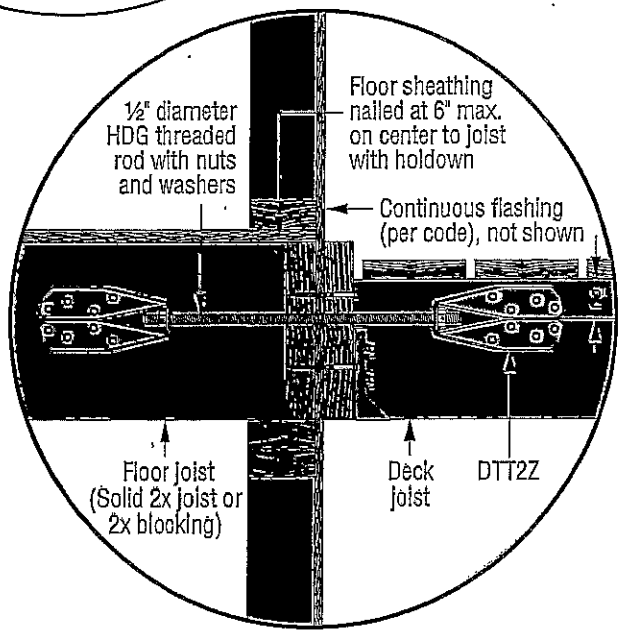

Deck to Ledger Installation Section View

Residential Decks - Ledger Flashing

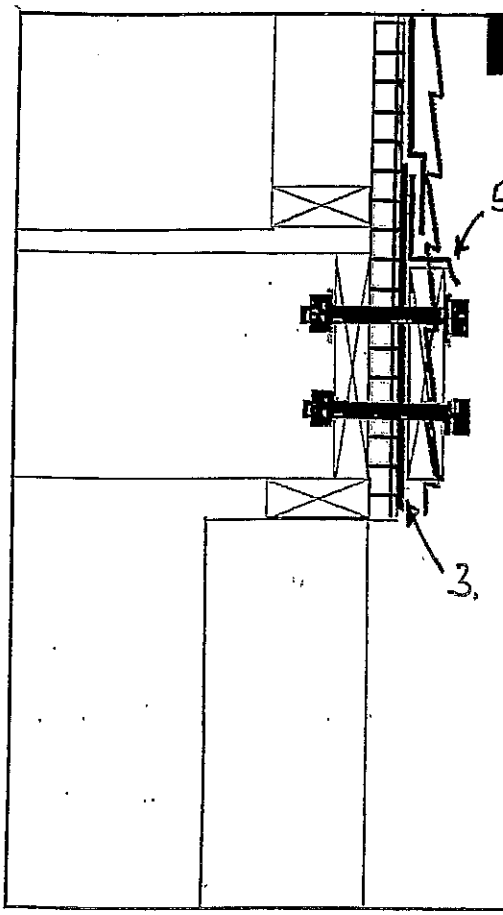

With Building Paper on Wall

1. Remove siding
2. Cut building paper
3. Insert back flashing
   - Provides capillary break,
   - shingled under building paper
4. Install Ledger Board
5. Install cap flashing
   Extends behind building paper

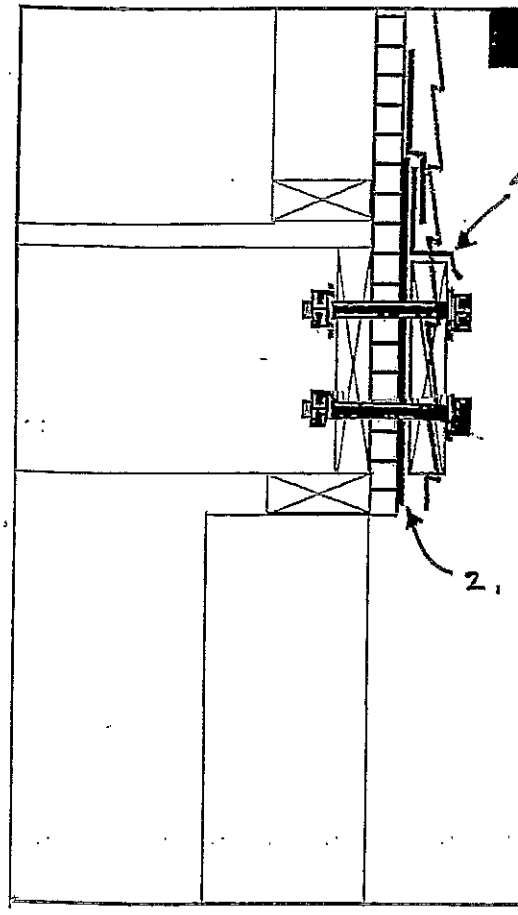

With Building Paper on Wall

1. Remove siding
2. Insert back flashing
   - Provides capillary break,
   - shingled under building paper
3. Install ledger board
4. Install cap flashing
5. Install strip of self adhesive flashing (counter flashing) to seal cap flashing

IS YOUR DECK SAFE?

Decks built 12-15 years ago or longer may be susceptible to excessive deterioration, wear, and fatigue. This should be checked out by using the services of a reputable and knowledgeable contractor or engineer.

If you see any of these warning signs, you should consider repairing, retrofitting, or rebuilding your deck.

Some of the signs:

Missing connections. A deck should be constructed using nails, screws, bolts, and metal connectors. Deck construction materials, hardware, and requirements have vastly improved over the last decade. Factors such as exposure to the elements, lack of maintenance, leaking flashings around windows and doors above the deck and even around the deck itself could make your deck unsafe. Look for missing or loose connections, corrosion, rot, and cracks.

The forces that act on a deck are people and objects, such as furniture, and Mother Nature, like wind and snow.

Gravity loads. This is the weight of people, objects, snow, or ice.

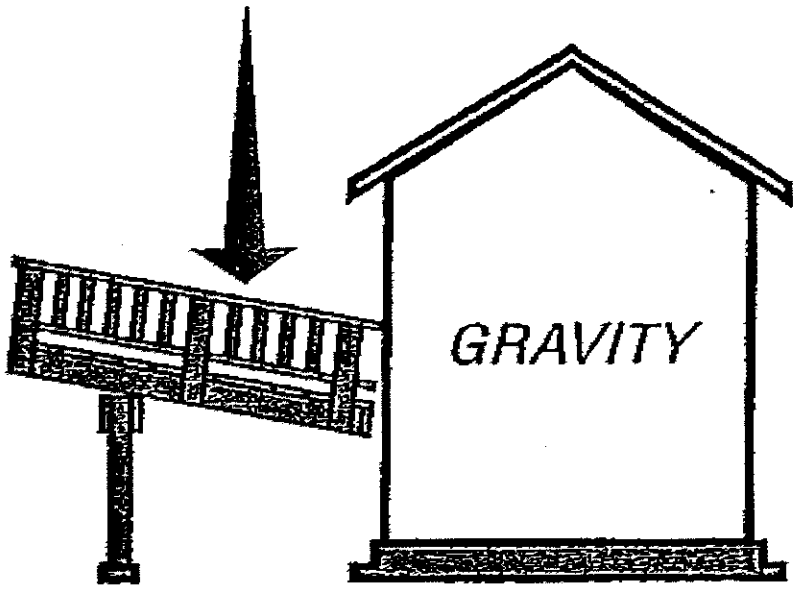

Example of Gravity Loads

Lateral loads. These are the back and forth motion (horizontal) caused by people walking or running and leaning on the railing. Wind and earthquakes can cause lateral movement.

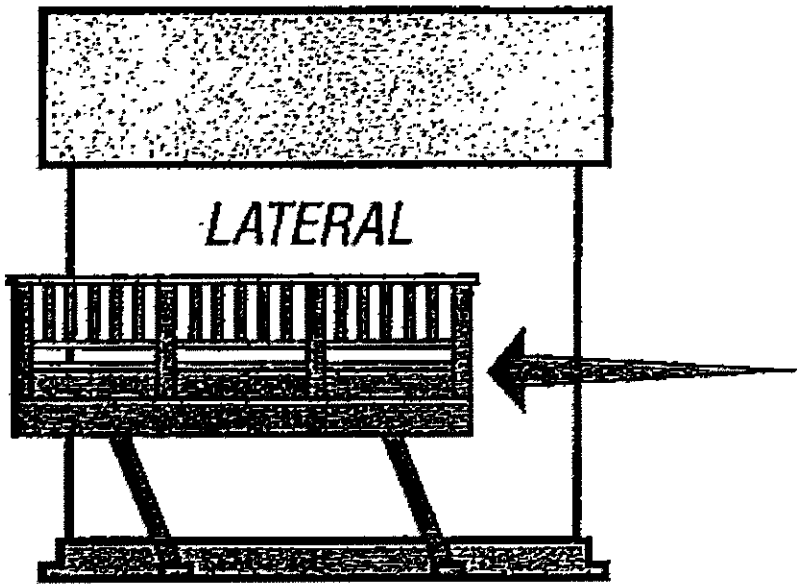

Example of Lateral Loads

Uplift loads. These are caused by wind flowing under the deck creating a lifting effect. People standing on the overhang portion of some decks create upwards pressure on the connection at the house.

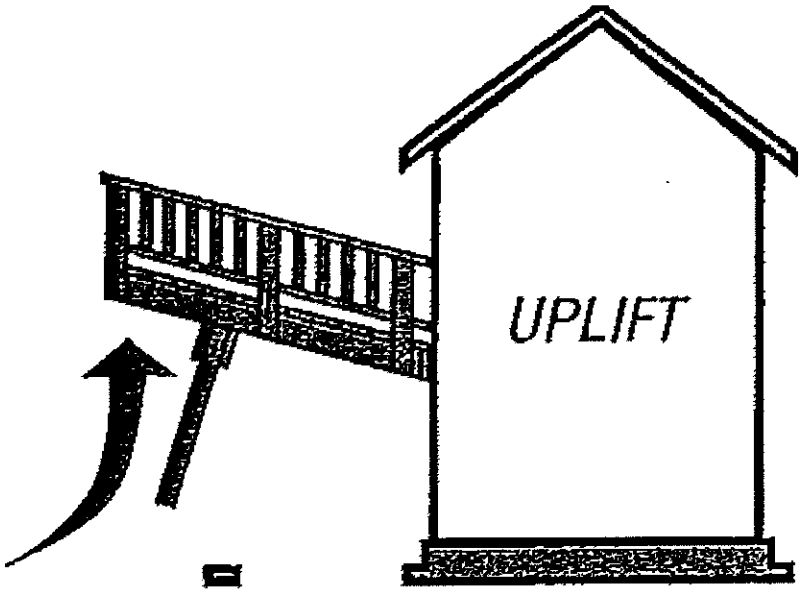

Example of Uplift Loads

INFORMATION PROVIDED BY SIMPSON STRONG-TIE COMPANY.